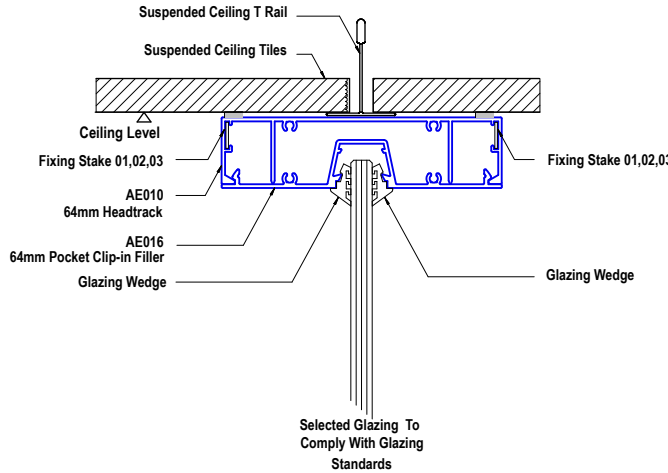
Suspended Ceiling T Rail
Suspended Ceiling Tiles
Ceiling Level
Fixing Stake 01,02,03
AE010
64mm Headtrack
AE016
64mm Pocket Clip-in Filler
Glazing Wedge
Fixing Stake 01,02,03
Glazing Wedge
Selected Glazing To
Comply With Glazing
Standards

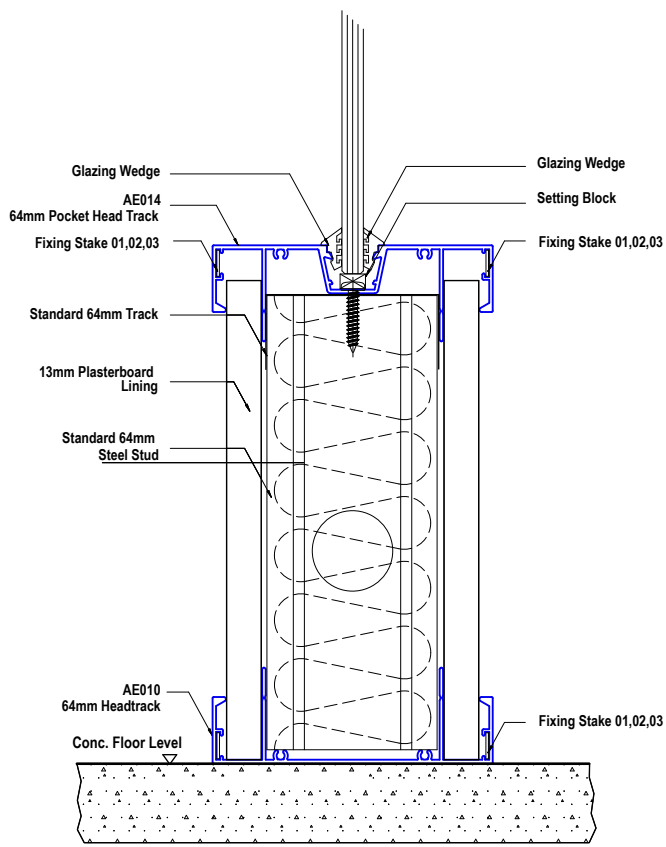
Glazing Wedge
AE014
64mm Pocket Head Track
Fixing Stake 01,02,03
Standard 64mm Track
13mm Plasterboard
Lining
Standard 64mm
Steel Stud
AE010
64mm Headtrack
Conc. Floor Level
Glazing Wedge
Setting Block
Fixing Stake 01,02,03
Fixing Stake 01,02,03